RESISTIVO INDUCTIVO
A Cal Power Company

2000 SERIES

Model 2755



The ASCO Model 2755 are resistive, AC load banks designed for operation indoors when up to 265 kW of resistive load is required.

LOAD BANK RATINGS

Standard capacityratingsof:

3 Phase, 60 Hz

- 265 kW at 480V• 198 kW at 415V
- 257 kW at 240V• 192 kW at 208V

Load step resolution of 5 kW at 480V. Please consult factory for non-standard ratings.

Fan and Control Power

Anexternal 120V, 1 Phase, 60Hz, 10 amp power source is required for the fan and control circuits.This power is derived from the control power receptacle located on the back of the unit.

Cooling System

Propercoolingisprovided by six (6) integral cooling fans. The cooling fans are fuse protected.

Operator Controls

Thestandard local mode is manual control via "digital toggle" switches. The local mode features full digital monitoring and individual load steps with LED indications. The integral control panel is provided for load bank operation and includes the necessary controls and status indicators.

The optional remote control mode is via the hand-held touchscreen controller. It features a 4.3" color touch screen housed in a rugged and easy to grip industrial grade enclosure. Load selection can be the sum of the entire load string (up to 25 load banks) or individual units within that string. Extremely fast and reliable CANbus communication protocol is used in the SIGMA LT for networking. CANbus protocol reduces network sag which is typically found in RS232 network load banks. A USB port is provided for data download and software updates.

Construction

The 2755 is constructed using heavy gauge aluminized steel per ASTM A463. It is designed for continuous indoor operation. Two (2) moveable and two (2) fixed casters are provided for easy mobility. All exterior fasteners are stainless steel.

Finish

The2755 has a high quality baked polyester powder coated finish with a film thickness of2.8+/- 0.4 milsper coat. Thestandard color is gray (ANSI 61).

Two Year Warranty Included

Theequipmentiscoveredbyanindustry exclusive 24-month parts and labor warranty.

Model 2755 Specifications

Resistor Elements

ASCOload banksusehelically wound chromium alloy Helidyne elements. Elements are supported by ceramic insulators on internal frame supports. These elements are designed to operate at approximately 1/2 of their maximum continuous wire rating.

Elements are positioned within the cooling airstream for optimal performance. Changes in resistance due to temperature are minimized by maintaining conservative watt densities. No cool down period required after use.

The overall load tolerance of the 2755 load bank is -0, +5%. This ensures that advertised kW is delivered at rated voltage.

The elements are continuously rated at the specific voltage. Tests at lower voltages, with a corresponding reduction in overall rating, may be carried out.

Safety Features

Exhaust temperature sensors are provided to monitor the flow of cooling air. These switches are electrically interlocked with the load application. If the fans are not working properly, the load steps are disabled.

The load bank also contains fuses for short circuit protection. The control/ blower circuit is protected with a 15 amp fuse while the individual load steps have branch circuit fuse protection.

Ambient Temperature

The2755 load bankis designed for continuous duty cycle with no limitations. The ambient temperatures range is -20°F to 120°F (-28°C to 50°C).

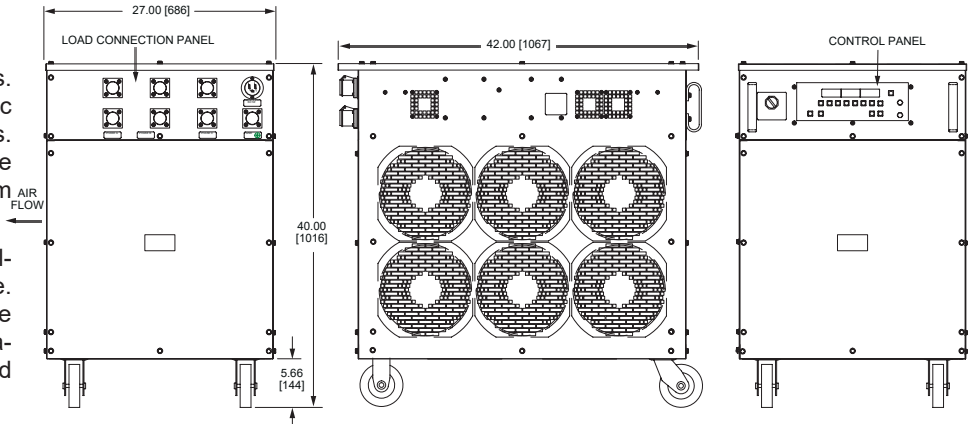

All dimensions are in inches [millimeters].
Specifications subject to change without notice.

Optional Accessories

- ControlPowerTransformer
- 4.3" Color Touchscreen Hand-Held Controller
- 5 m Interconnection Cable (other lengths available)
- 20' LoadCable Set with Connectors

Documentation - Operating Manual

Acomprehensive operator's manual is supplied electronically via a USB drive. Sections include: Safety, Installation, Operation, Maintenance, and Troubleshooting.

Testing and Standards

ASCO load banks comply with NEMA, NEC, and ANSI standards. Quality control system is certified to ISO9001 standards.

Weight and Dimensions

Dimensions (approx. in/mm)			Weight (approx. lb/kg)
Length	Width	Height	
42/ 1067	26.56/ 675	39.96/ 1015	385/175*

*NOTE: Approximate weight includes optional control power transformer.

RESISTIVE REACTIVE
A Cal Power Company
664 120 0714 55 4354 0097 55 4354 0097
resistivoinductivo.com